Model(型號): 直滑式---------S[X][X]712VB1

►下載PDF文檔

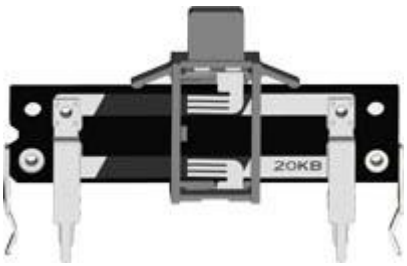

特點:

極佳的操作手感，用於熱控器，清晰的定位手感 。用於電子樂器 ，平骨與濕滑的手感，低噪音，長壽命，高精確的衰減調控。

作用:

電子琴、混音器的聲減調控汽車空調的熱控或模式轉換測量儀器。

Dimensions(規格圖):

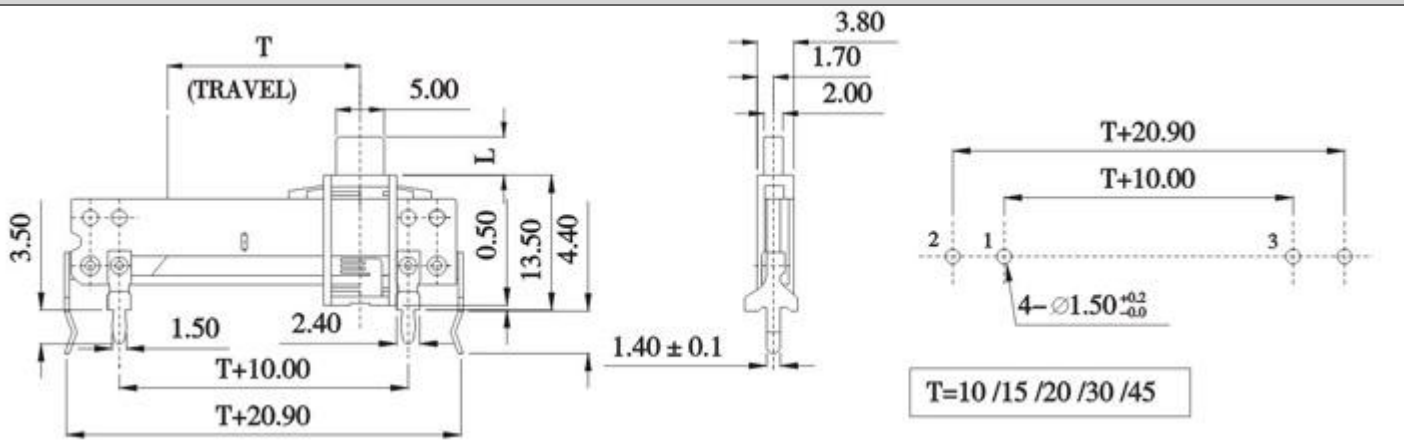

Specifications(規格)

Electrical Characteristics [電氣性能]	
Total resistance [全阻抗值]	100Ω ~1MΩ
Total resistance tolerance [全阻抗值容許差]	±20%
Ratings power(w) [額定功率]	Travel 30mm B Single 0.2W,Dual 0.1W Except B single 0.1W,Dual 0.05W
Resistance taper [阻抗變化特性]	A,B,*C,D,W
Residual resistance(1-2/2-3) [殘留阻值]	10/20 Max.
	30/50 Max.
	50/70 Max.
	100/120 Max.
	200/220 Max.
	300/320 Max.
Sliding noise [滑動雜音]	Single unit: 100mV Max,Dual unit: 150mV Max
Insulation resistance [絕緣阻抗]	10MΩ Min. at DC 250V.
Withstanding voltage [耐電壓]	1 minute at AC 250V
Max. operating voltage [最高使用電壓]	B 200V , Except B 150V
Cang error:[運動誤差]	Volume[音量] -40dB ~0dB±3dB Max
	Tone [音質] ±3dB Max. at 50% position.
Mechanical Characteristics [机械性能]	
Operation torque [滑動力矩]	10~200gf.cm
Click slip out torque[掣子脫出力矩]	30~350gf.cm
Lever wobble[推柄搖晃]	2(2xL)/20mm Max. L=length of level
Lever push-pull strength[推拉強度]	3.0Kgf. cm Max. at 5 sec.
Endurance Characteristics [耐久性能]	
Rotational life [回轉壽命]	More than 10,000 cycles